9th International Conference on Short and Medium Span Bridges
Calgary, Alberta, Canada, July 15-18, 2014

EXPERIMENTAL TESTING OF 55-YEAR-OLD PRETENSIONED BRIDGE GIRDERS

Brandon E. Ross, PE, PhD
Clemson University, USA

H.R. (Trey) Hamilton, PE, PhD
University of Florida, USA

Gary R. Consolazio, PhD
University of Florida, USA

ABSTRACT

Ultimate load tests were conducted on four precast pretensioned I-girders that were removed from a Florida bridge after nearly 55 years of service. The shear capacity of these girders is of interest because they had relatively thin webs and limited vertical reinforcement. Varying portions of the deck were retained with each girder to evaluate the effect of the deck on shear capacity. Girders were loaded in three-point bending at a/d ratios ranging from 2.1 to 4.5. Experimental results were compared to nominal capacities from the ACI and AASHTO design codes. In spite of having thin webs and limited reinforcement, the girders supported shear forces that were an average of 66% and 79% greater than the nominal capacities from ACI and AASHTO, respectively. Test results and code comparisons will be helpful in evaluating the strength of similar girders that are still in service.

1. INTRODUCTION

The Florida highway system includes some of the earliest (circa 1950s) pretensioned concrete bridges in North America. Shear capacity of Florida's early pretensioned girders is of interest because the early designs had thin 102mm (4in.) webs and only limited vertical reinforcement. This paper presents the results of load testing of girders that were removed from an existing bridge (Figure 1) after nearly 55 years of service. Girders were approximately 7.6m (25ft) in length and supported a cast-in-place deck.

Four interior and two exterior girders were removed and tested. This paper discusses testing of the interior girders. Testing of the exterior girders is discussed in a report for the Florida Department of Transportation (FDOT) (Ross et al. 2013). Girders were loaded in three-point bending at a/d ratios ranging from 2.1 to 4.5. Load tests were conducted to assist engineers in evaluating the strength of similar existing girders.

In addition to evaluating shear capacity of early pretensioned girders, this project also had the goal of evaluating the contribution to the shear capacity from the cast-in-place concrete deck. To this end, varying portions of the deck were retained with each salvaged test girder. Width of the retained deck portions ranged from 0.6m to 2.1m (2 ft to 7 ft.) Previous researchers have demonstrated that a portion of the deck beyond that directly above the girder contributes to shear capacity (e.g. Leonhardt and Walther 1962, Ruddle et al. 2003, Zararis et al. 2006).

Each girder was given a unique label based on the width of the retained deck and position as an internal or external girder (Figure 2). Interior girders discussed in this paper were labeled with an 'I'. The numeric portion of each label indicates the nominal width of the slab in feet. For example, girder 'I6' was an interior girder with a nominal 6 ft (2 m) wide deck. Note that the dimensions for slab widths shown in Figure 2 are nominal dimensions and that the actual widths varied slightly along the length of the test girders.

Figure 1–Existing bridge prior to girder removal.

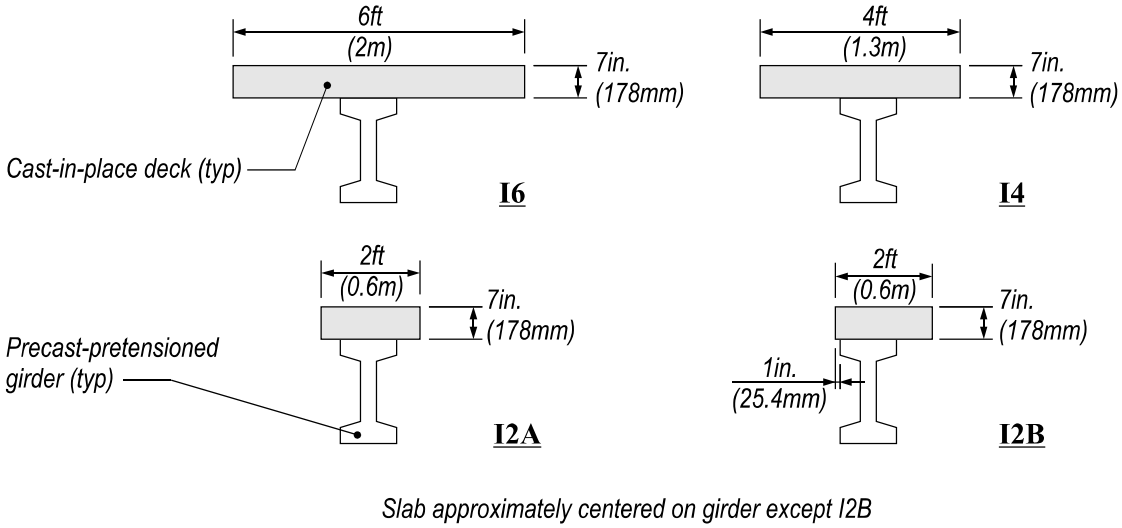

Figure 2–Test girder labels and slab configurations.

2. GIRDER AND DECK DESIGN

Test girders were salvaged from a bridge on Highway SR-72, in Sarasota County, Florida, USA. Girders were precast and pretensioned, having the cross section, reinforcement, and prestressing shown in Figure 3. Additional details, including the original construction drawings from 1954 can be found in the FDOT report.

Drawings specified that each girder be prestressed with (15) 3/8-in. (9.5mm) diameter stress-relieved strands pretensioned to 14 kip (62.3kN) each. No records from pretensioning operations are available, however the effective prestress force of girder I2A was experimentally evaluated using the procedure described by Pessiki et al. (1996). The experimentally determined prestress was approximately half of the specified jacking stress. This discrepancy is greater than typical values of prestress loss, and it is presumed that the applied jacking stress was lower than specified. Details and analysis of the experimental evaluation of prestress are presented in the aforementioned FDOT report.

The specified 28-day compressive strength was 5500psi (37.9MPa) for the girders and 3600psi (24.8MPa) for the deck. Concrete core samples were taken and tested in 2006. Core samples were not taken from the test girders, but from other girders on the same bridge. Results of the core tests indicate that the average concrete compressive strength was 3240psi (22.3MPa).

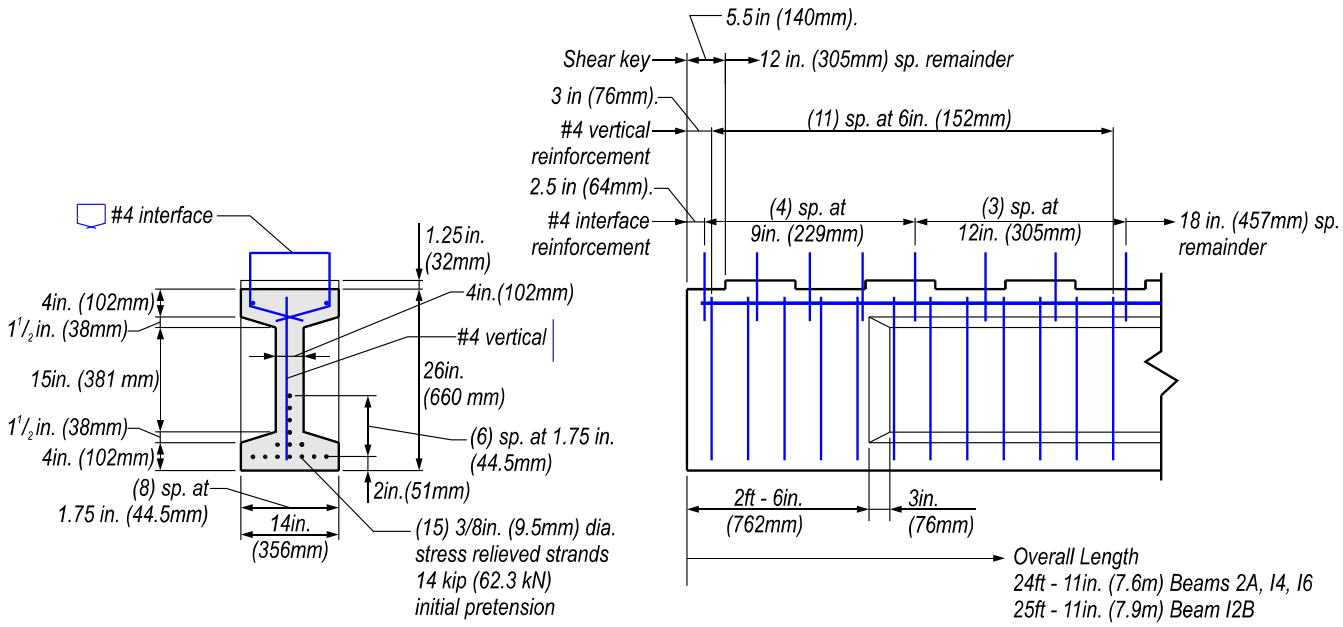

Figure 3–Girder cross section, reinforcement, and prestressing

Construction drawings specified two continuous #4 longitudinal bars in the top flange and (12) #4 vertical bars spaced at 6 in. (152mm) at each end of the girders (Figure 3). The vertical bars did not have hooks specified. End blocks extended 2.5 ft (762mm) from each end. Non-destructive testing was used to locate the vertical bars in the web. Only two of the eight specimen ends had the specified number of reinforcement bars. Vertical reinforcement placement is discussed in section 4.

Drawings called for shear keys (Figure 3) on top of the girders to create composite action with the cast-in-place deck. Hoops were also specified to tie the girders and deck. The hoops were #4 bars partially embedded into the top flange, with the remaining portion extending above the girder and embedded into the deck. Drawings specified (24) hoops total for each girder, with 9in. (229mm) spacing at the ends, and 18in. (457mm) spacing near mid-span.

Original drawings for the deck called for a 7-in. (178mm) thick cast-in-place deck reinforced with longitudinal and transverse #4 bars top and bottom. Longitudinal bars were specified at an average of 12 in. (305mm) spacing in the bottom of the deck, and 18 in. (457mm) spacing in the top. Specified transverse reinforcement was #4 bars at 10 in. (254mm) spacing in the top and bottom of the deck. Additional transverse #4 bars were spaced at 10 in. (254mm) and were bent to support negative moments over the girders and positive moment between girders.

End diaphragms were cast between the girders at each end of the bridge and had a specified thickness of 8 in. (203mm) with 1-in. (25.4mm) diameter threaded bar extending through the end diaphragms and girder end blocks to tie the bridge together transversely. Varying portions of the end diaphragms were retained with individual test girders. Relevant details about the end diagrams are given in the next section.

3. TEST SET-UP, PROCEDURES, AND INSTRUMENTATION

Girders were load tested in three-point bending (Figure 4). Load was applied at rate of approximately 0.25 kip/second. A load cell was used to measure the applied load. Linear Variable Displacement Transducers, LVDTs, were used to measure vertical displacements at the load point and above each support. LVDTs were also used to measure strand slip at the end face of the girders. A steel frame was bolted to the end face to support the strand slip LVDTs. Strand slip was not observed during testing of the girders and is not discussed in this paper. Bonded foil strain gages were used to measure concrete surface strain and to detect cracks during testing.

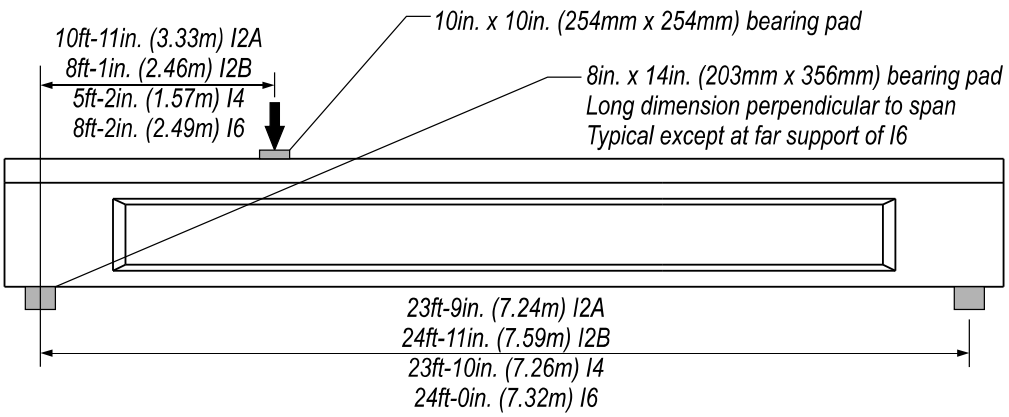

Figure 4–Test set-up.

Girders were supported at each end on reinforced elastomeric bearing pads. Additional bearing points were added at the far support of girder I6 to provide stability during testing. The additional bearing pads were placed below the end diaphragm as shown in Figure 5.

Figure 5–I6 far support.

4. RESULTS AND DISCUSSION

Results of the load tests are presented in terms of superimposed shear (Figure 6). Superimposed shear is defined as the shear force at the near support due to the load applied by the hydraulic actuator. The superimposed shear does not include shear force due to girder self-weight. Displacement results are presented as the vertical displacement at the load point. Vertical deflection at the load point was taken as the average displacement recorded by the LVDTs on either side of the load point, less the displacement of the girders due to bearing pad compression at the reactions.

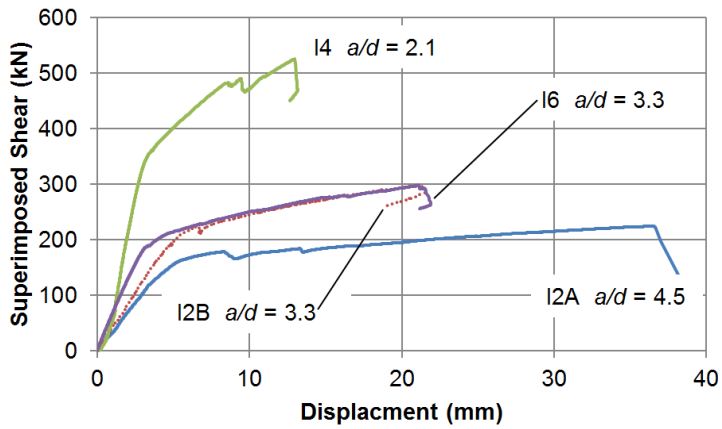

Figure 6–Shear vs. displacement.

4.1 Test I2A

Specimen I2A was load tested at an a/d ratio of 4.5. The load-displacement behavior was linear-elastic until the superimposed shear reached approximately 120kN (27kip). Softening of the girder corresponded to the propagation of flexural cracks. The abrupt changes in the shear-displacement data (Figure 6) at displacements near 8mm and 13mm (0.3in and 0.5in) were due to the formation of inclined cracks in the web. Cracking in the web between the load point and the near support was particularly severe, as shown in
Figure 7 and by the shading in Figure 8. As the load increased, additional cracks formed farther from the load point and at shallower angles.

Figure 8 shows the location of transverse reinforcement. Bars on the near support side of the load point were visible after cracking and were oriented as shown in the figure. The quantity of bars at the far support were determined non-destructively using a cover meter, however their orientation could not be determined. In absence of information on orientation Figure 8 shows the transverse reinforcement oriented vertically as specified in the original plans.

Cracks along the web-flange interface in the shear span prevented the transverse reinforcement from developing and carrying shear forces. On the far support side of the load, the cracks did not engage the transverse reinforcement. Incline cracks on both ends of the beam were too wide to allow force transfer by aggregate interlock. Without aggregate interlock and effective transverse reinforcement, the girder behaved as a tied-arch during the final stages of loading.

Failure was precipitated by the formation of tensile stress at the top of the arch (i.e. deck) between the near support and load point. Tension led to cracking at the top of the deck, which then caused the arch to became unstable and buckle upward (
Figure 7). This type of failure has also been reported by Kostovos (1987). Failure occurred at a superimposed shear of 227kN (51kip).

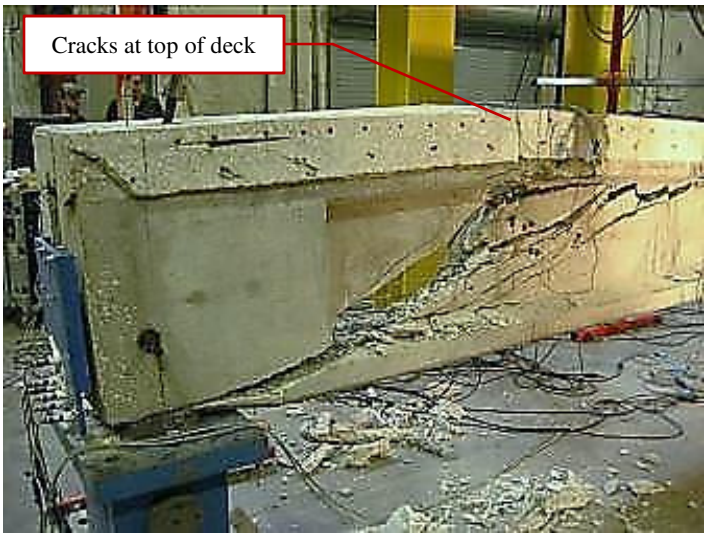

Figure 7–Failure of I2A

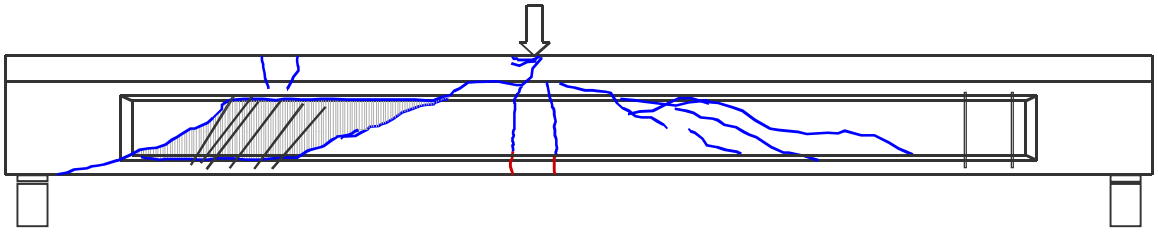

Figure 8–I2A cracks and damage (initial cracks in red)

4.2 Test I2B

Girder I2B was loaded at an a/d ratio of 3.3, and behaved linear-elastically until the superimposed shear reached approximately 190kN (43kip), at which point flexural cracks formed below the load point (Figure 6, Figure 9). As additional load was applied, inclined cracks formed in the web and additional flexural cracks formed in the bottom flange. The peak shear of 298kN (67kip) corresponded to the formation of an inclined crack toward the far support.

Figure 9 can be used to compare the locations of cracks and transverse reinforcement. Reinforcement quantity and approximate location was determined through non-destructive evaluation, however the orientation shown in the figure could not be verified. From Figure 9 it can be observed that cracks between the load and near support intersected transverse bars whereas cracks towards the far support did not. As the cracks towards the far support were large, shear was not carried by aggregate interlock at that end of the beam. Thus it is believed that the near side of the girder supported load by some combination of arch and truss action, and the far side supported load by arch action. Additional displacement beyond displacement at peak load would have resulted in failure of the truss and/or arch mechanisms; however it is unlikely that additional displacement would have resulted in load larger than the observed peak.

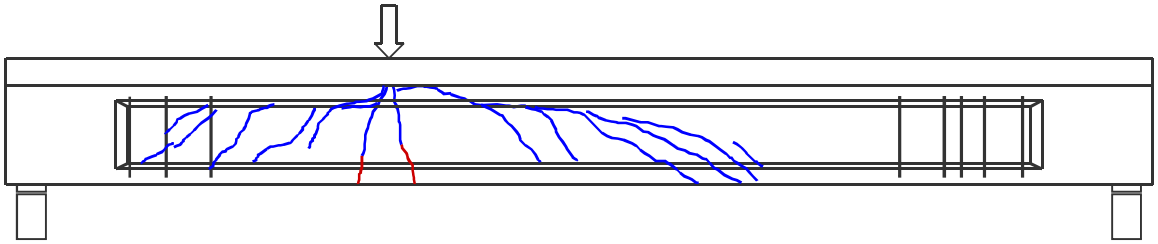

Figure 9–I2B crack pattern (initial cracks in red).

4.3 Test I4

Girder I4 was loaded at an a/d ratio of 2.1. Cracking was first observed in the web at a shear of 169kN (38kip) (Figure 10). Initial cracking had little effect on the girder stiffness as measured by the shear-displacement relationship (Figure 6). Stiffness of the girder changed at a shear of approximately 330kN (74kip) when an inclined crack formed at the web/end block interface by the near support. As load was increased additional cracks formed in the web on the far support side. The cracks formed farther from the load point and at shallower angles at higher loads. The abrupt changes in the shear-displacement plot near 9mm (0.35in) corresponded with formation of inclined cracks towards the far support. During the final stages of loading cracks in the web were approximately 12mm (0.5in) wide. As shear could not transfer across the cracks, and as the cracks did not engage transverse reinforcement, it is believed that the end of the girder towards the far support behaved as a tied arch during the final stages of loading. The peak superimposed shear supported by girder I4 was 525kN (118kip). Additional displacement would have resulted in failure of the truss and/or arch mechanisms; however it is unlikely that additional displacement would have resulted in loads in greater than the 525 kN (118kip) peak.

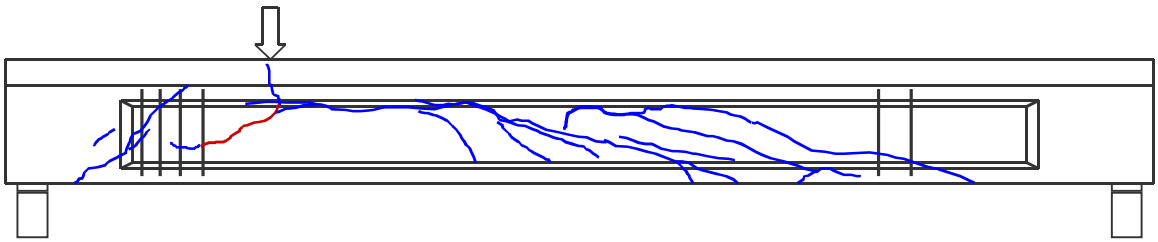

Figure 10–I4 cracks (initial crack in red.)

4.4 Test I6

Girder I6 was loaded at an a/d ratio of 3.5. The girder behaved linear elastically until a flexural crack formed at a superimposed shear of 190kN (43kip) (Figure 6, Figure 11). Inclined cracks formed in the web toward the near support at a shear of 215kN (48kip). Shallower cracks formed farther from the load point as the load was increased.

The load test was terminated after a sudden drop in load caused by the formation of an incline crack at the far end of the girder. The maximum superimposed shear was 303kN (68kip). Cracks may have intersected transverse reinforcement at the near end, but not at the far end (Figure 10). Thus applied load was primarily carried by arch action during the final stages of testing. Additional displacement beyond the tested peak would likely have resulted in failure of the arch mechanism; however it is unlikely the additional displacement would have resulted in load greater than the observed peak.

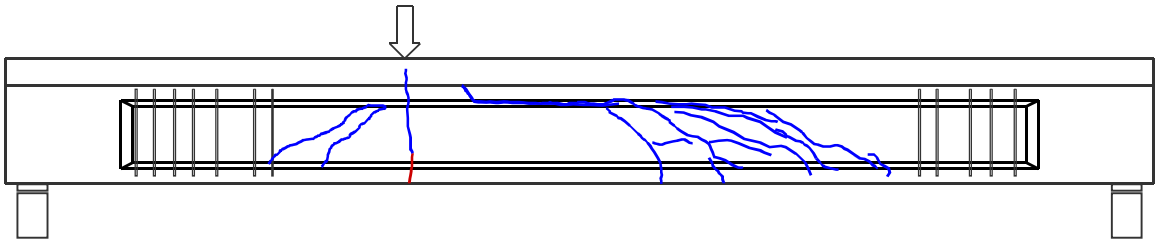

Figure 11–I6 cracks (initial crack in red).

5. CODE COMPARISON

Experimental girder capacities were compared with nominal shear capacities calculated using the detailed procedure from ACI 318 (2011) and the general (MCFT based) procedure from AASHTO LRFD (2010). Calculations were based on the specified reinforcement, prestressing, geometric properties, and material properties. This approach was used because physical properties based on testing may or may not be available for engineers performing load ratings on similar bridges. Results presented in Figure 12 and Table 1 indicate that the nominal shear capacity based on specified properties were conservative relative to the experimental results.

Figure 12 shows the code calculated nominal capacities plotted against the shear span length (a). The discontinuity at a = 1.75m (5.7ft) occurs due to the specified termination of transverse reinforcement at that location. Point data on the figure represent the experiment shear capacity of the test girders. The experimental capacity of the girders was taken as the maximum superimposed shear plus the self-weight shear. In each case, the experimental capacities of the girders were greater than the theoretical capacities predicted by ACI and AASHTO codes. Data from Figure 12 is tabulated in Table 1. The experimental shear capacities were on average 1.66 and 1.79 times larger than the nominal capacities calculated by ACI and AASHTO, respectively.

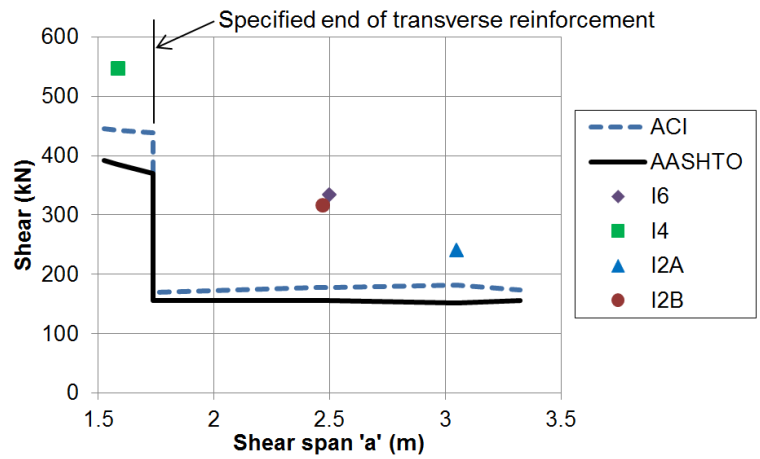

Figure 12–Experimental and theoretical shear capacities.

Table 1–Comparison of experimental and theoretical shear capacities.

Girder	Experimental Shear Force	ACI Nominal Shear Capacity	AASHTO Nominal Shear Capacity	Exp. / Nominal ACI	Exp. / Nominal AASHTO
I6	334kN (75kip)	165kN (37 kip)	156kN (35kip)	2.03	2.14
I4	547kN (123kip)	414kN (94 kip)	387kN (87kip)	1.31	1.41
I2A	240kN (54kip)	169kN (38 kip)	151kN (34kip)	1.42	1.59
I2B	316kN (71kip)	169kN (38 kip)	156kN (35kip)	1.87	2.03
Avg.				1.66	1.79

6. SUMMARY AND CONCLUSIONS

Four pretensioned concrete girders were salvaged from an existing bridge and tested after nearly 55 years of service. Girders were tested in three point bending at a/d ratios from 2.1 to 4.5. A varying portion of the existing deck was retained with each test girder. The experimental results were compared to theoretical shear capacities calculated using ACI and AASHTO procedures. Based on the experimental and analytical results, the following conclusions are made:

- Girders carried applied loads though tied-arch behavior during the latter stages of loading. This is evident from the relatively wide cracks which did not allow aggregate interlock and from the absence of transverse reinforcement necessary to allow truss action.

- Girder I2A failed due to instability of the tied-arch mechanism. Girders I2B, I4, and I6 were not tested to failure of the tied-arch, however peak load of these girders were limited by formation of inclined cracking in the web.

- Nominal shear capacities calculated by ACI and AASHTO methods were conservative relative to the experimental results. On average experimental-to-nominal shear capacity ratio was 1.66 for ACI calculations and 1.79 for AASHTO calculations.

- Insufficient data was available to evaluate the effect of the cast-in-placed decks on experimental shear capacity.

- In spite of relatively thin webs, small quantities of vertical reinforcement, and poor quality control during construction, the girders were able to support significant shear force after nearly 55 years of service.

7. ACKNOWLEDGMENTS

This research was funded by the Florida Department of Transportation. Testing was conducted at the FDOT Marcus H. Ansley Structures Research Center in Tallahassee, FL, USA. The Research Center staff assisted in test set-up, instrumentation, data acquisition, and other project logistics. The authors also acknowledge Mr. Srimaruthi Jonnalagadda, a graduate student at Clemson University, who provided a preliminary review of this manuscript.

8. REFERENCES

AASHTO. 2010. *American Association of State Highway and Transportation Officials LRFD Bridge Design Specifications 5th Edition*. Washington, DC, USA.

ACI. 2011. *Building Code Requirements for Structural Concrete and Commentary. ACI 318-011*. American Concrete Institute (ACI), Farmington Hills, MI, USA.

Kotsovos, M., Bobrowski, J., Eibl, J. 1987. Behavior of Reinforced Concrete T-Beams in Shear. *Structural Engineer, Part B: R&D Quarterly*, 65 B (1):1-10.

Leonhardt, F., Walter, R. 1962. *The Stuttgart shear tests 1961*, Translation III. Cement and Concrete Association Library. London.

Pessiki, S., Kaczinski, M., Wescott, H. 1996. Evaluation of Effective Prestress Force in 28-Year-Old Prestressed Concrete Bridge Beams. *PCI Jounral*, 41(6):78-89.

Ross BE, Hamilton HR, Consolazio GC. 2012. *End Region Detailing of Pretensioned Concrete Bridge Girders*, Florida Department of Transportation. Tallahassee, FL, USA.

Ruddle, M., Rankin, G., Long, A. 2003. Arching action – flexural and shear strength enhancements in rectangular and tee beams. *Proceedings of the ICE – Structures and Buildings*. 156(1): 63-74.

Zararis, I. Karaveziroglou, M., Zararis, P. 2006. Shear strength of reinforced concrete T-beams. *ACI Structural Journal*, 103(5): 693-700.