# FLEXURAL TESTS OF FOAM-VOID PRECAST T-BEAMS

**Srimaruthi Jonnalagadda, PhD**, Metromont Corp., Greenville, SC
**Sachin Sreedhara**, **MS Student**, Clemson University, Clemson, SC ssreedh@g.clemson.edu
**Mahmoodreza Soltani, PhD, EIT**, Lecturer, Clemson University, Clemson, SC
**Brandon E. Ross, PhD, PE**, Assistant Professor, Clemson University, Clemson, SC

## ABSTRACT

*Gross vehicular weight restrictions limit the shipping of typical prestressed concrete double-tees (DT) for parking decks to one member per trip. The objective of this study is to reduce the self-weight of these members to facilitate two-at-a-time shipping, and thus enable lower shipping costs and reduced environmental footprint. In this research two 35 foot-long DT members were fabricated and tested to study strategies for reducing self-weight. Foam boards were placed inside the stems of the DT members to produce foam-void double-tees (FVDT). One inch and two inch-thick foam boards were used along with normal and semi-light weight concretes. The two FVDT members were cut length-wise through the top flanges to create four unique single-tee specimens, which were then load tested to evaluate structural capacity and behavior. This paper discusses the experimental setup and results of flexural testing. The test results demonstrated that the presence of foam boards had negligible effect on flexural performance; each of the foam-void specimens supported an experimental moment that was greater than the calculated nominal moment capacity. Furthermore, the foam-void specimens displayed significant ductility.*

**Keywords**: Parking Garages, Trucking, Shipping, Testing, Flexure, Self-weight

## INTRODUCTION

Double-Tees (hereafter referred to as "DT") members (Fig. 1) are a staple of the precast concrete industry. Millions of square foot of DT members are fabricated in the United States annually. These members offer flexibility in design and construction, and are an ideal choice for structures such as parking garages that require long uninterrupted spans and high load carrying capability. Because of their widespread use, small improvements in the efficiency of DT members can have a significant effect on the overall environmental footprint and economic competitiveness of the precast industry.

Fig. 1. Double-tee members

The Gross Vehicular Weight (GVW) limit for US highways – 80 kip in most states and circumstances – can limit the economical use of DT members. Due to the magnitude of their self-weight, typical 60 ft.-long parking garage DTs cannot be legally transported two per truck. The current research is motivated by a desire for two-at-a-time transport, which would improve both economic and environmental efficiency. Two-at-a-time shipping has the potential to reduce both costs and emissions from trucking. This paper describes an experimental program that was conducted to evaluate the suitability of foam-void double-tee (FVDT) members (Fig. 2). Placing foam voids in the webs of FVDT reduces self-weight and contributes to the possibility of two-at-a-time transport.

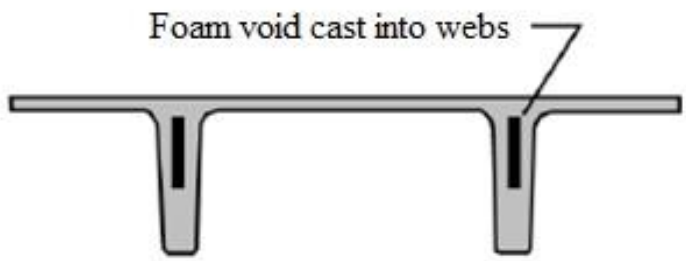


Fig. 2. Foam-void double-tee (FVDT)

## BACKGROUND

Precast-pretensioned concrete double-tees were first built in 1951. The history of these members in the precast industry has been documented by Nasser et al.[1], Wilden[2], and Edwards[3]. The overall form of DT members is well suited for precast concrete construction; standardized cross sections lead to fabrication efficiency and the cross section shape provides structural stability for storage, shipping, erection, and service. The original double-tee cross section (Fig. 3, left) has changed and evolved over the years. The cross section has been modified to account for changes in steel and concrete material properties and to suit different loading conditions. Double-tees have been used as floor, roof, and wall structures of buildings and have also been used in industrial applications and in bridges. The New England Extreme Tee (NEXT) beam (Fig. 3, right) is being used in highway bridges and is one example of a modern DT member. Parking garages are currently one of (if not the) most common applications of DT members. Parking garage DT members (shown in Fig. 1) are the primary focus of the current research, and are relatively more slender than NEXT beams.

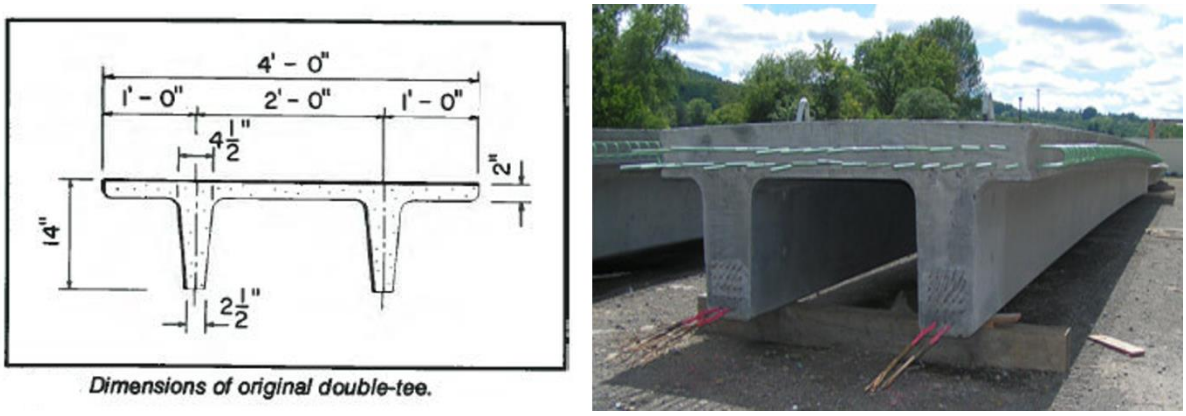


Fig. 3. Early DT (left, figure from Edwards) and NEXT beams (right, photo from L. C. Whitford Materials Co., Inc.)

DT members are fabricated as field-topped or factory-topped (Fig. 4**Error! Reference source not found.**). Factory-topped DTs have thicker top flanges. Once erected, the flanges act as floor and roof diaphragms. Connections between adjacent factory-topped members are

detailed to resist differential vertical movement and to carry diagraph forces. Field-topped members have thinner top flanges and have a concrete topping placed on them after erection. The topping acts compositely with the precast to carry vertical and diaphragm loads. Reinforcement for the diagram is placed in the cast-in-place topping. Field-topped members are commonly used in regions with high seismic loads. The current study focuses exclusively on field-topped DTs.

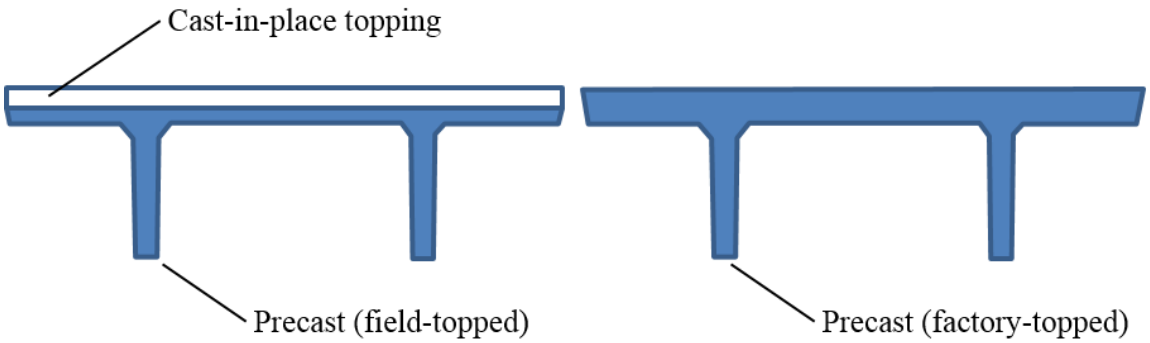


Fig. 4. Field-topped (left) and factory-topped (right)

Reducing the self-weight of DT members has been the subject of previous research. Barney et al.[4] , Savage et al.[5] and Saleh et al.[6] studied DT beams with web openings (Fig. 5). In these studies, concrete was eliminated from locations in the web that do not contribute significantly to stiffness or flexural strength. Special reinforcement was used around the web openings to carry shear forces. Researchers considered the location of openings and reinforcement around the openings as variables. When tested, the behavior of the beams was similar to that of a Vierendeel truss. The test specimens with web openings demonstrated satisfactory strength or serviceability. To achieve adequate structural performance for this type of member, shear reinforcement must be provided adjacent to openings and the openings must be placed away from the end regions.

Fig. 5. Single tee with web openings (photo courtesy- M. Tadros[5])

The proprietary BubbleDeck system[7] is another example of reducing structure self-weight by placing voids where concrete is not needed for structural capacity. The BubbleDeck system has won numerous awards for its "green" features. The current research on foam-void double-tee members takes a similar approach to BubbleDeck; foam is used to displace concrete (and thus reduce self-weight) at locations where the concrete is not needed for structural purposes. Development of FVDT members aims to enhance the precast industry's ability to produce products that are competitive in an increasingly eco-aware and green construction marketplace.

## EXPERIMENTAL PROGRAM

The experimental program was conducted to study flexural and shear capacities of members with foam voids. For efficiency in testing, each "specimen" in the study was a single-tee member. Four total specimens were fabricated by cutting two FVDT members lengthwise. This paper will focus on flexural testing of three of the specimens; results from the fourth specimen were not available at the time of writing. Four point bending tests were conducted on the specimens in different load stages from 50% of service load to ultimate load. A comprehensive report of the test program will be available in a forthcoming thesis.

### SPECIMEN DETAILS AND CONSTRUCTION

Specimens were created from two 35' long 12DT28 members. One of the members was cast with normal weight concrete (145 pcf) and the other with semi-light weight concrete (126 pcf). One stem of each DT member had a 1 in.-thick foam board, and the other stem had a 2 in.-thick foam board. The percentage of weight reduction relative to a solid (non-foam void) specimen due to the inclusion of 1 in.-thick foam board was 4.0 % and due to 2 in.-thick foam board was 8.1 %. Cross section, elevations, prestressing, and reinforcement details of the specimens are shown in Fig. 6 and **Error! Reference source not found.**Fig. 7. The cut-

off location (5 ft. from the ends), length (25 ft.), and depth (12 in.) of the foam boards were the same in all four specimens. Each specimen was given a unique identification based on its variables (Fig. 8).

The foam boards were Extruded Polystyrene (XPS) foam. EPS (Expanded polystyrene foam) foam is also commonly used in precast members. Foam boards have relatively low weight and high R-value and are typically used as insulation in precast sandwich panels. EPS is less costly than XPS, but has lower mechanical and thermal properties relative to XPS. Because XPS is more robust, XPS foam boards were used in this project.
The test specimens were fabricated in the same bed as production members for a building project, and the strand pattern (Fig. 6) was based on the production members. Because the test specimens had a shorter span that the production members, stresses in the specimens were controlled by debonding the top-most strand. For safety purposes, a 3 ft. segment of the top-most strand was bonded at mid-span.

Transverse reinforcement in the specimens were custom-made #3 stirrups (Fig. 9), which included a gap for holding the foam board. The transverse reinforcement was anchored down by the strands, and the foam was anchored down by the stirrups. Concrete and reinforcement material properties are listed in Table 1. The members were fabricated at a plant in Spartanburg, South Carolina in fall 2015. Photos of construction are shown in Fig. 10 and Fig. 11.

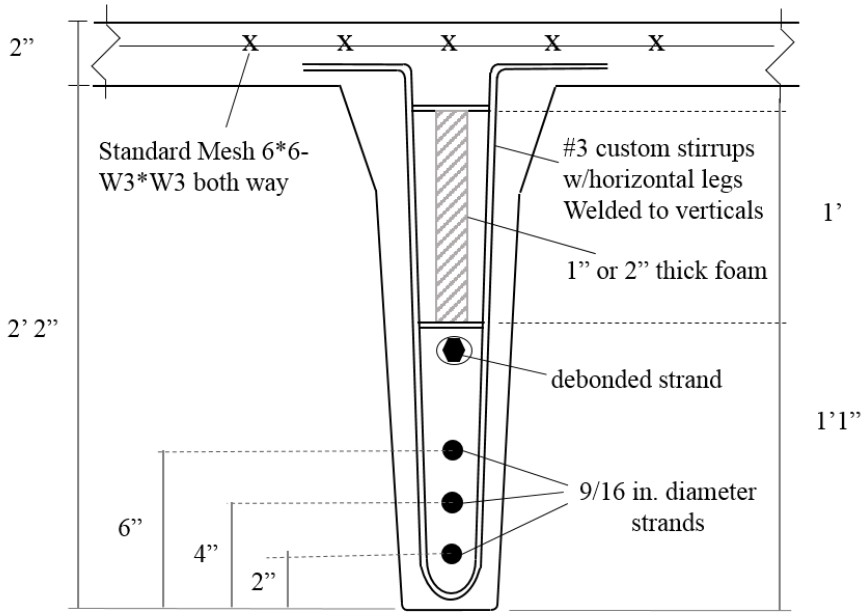


Fig. 6. Specimen cross section

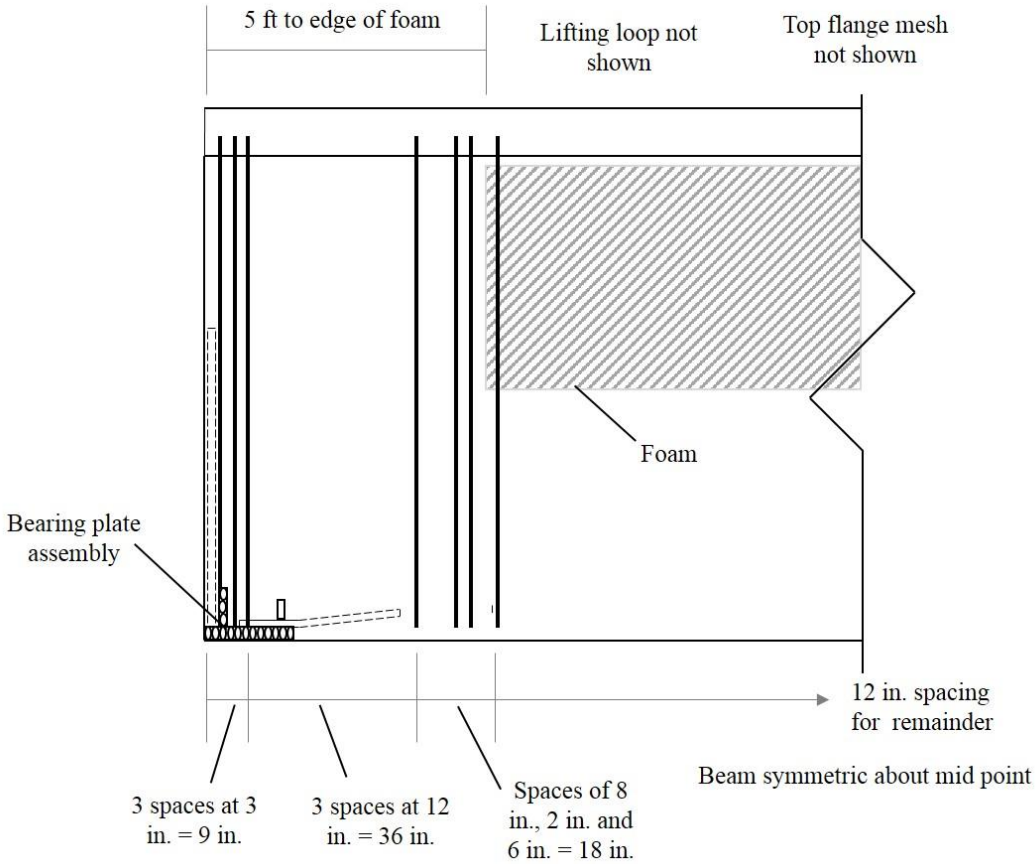


Fig. 7. Specimen vertical reinforcement

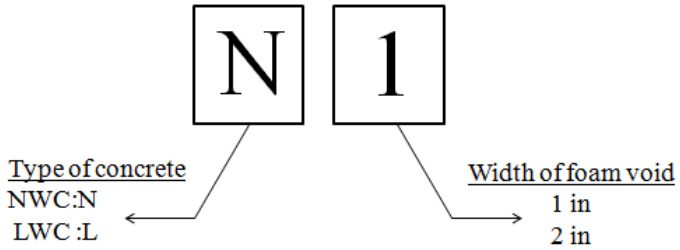


Fig. 8. Specimen identification based on variables

Fig. 9. Custom #3 stirrup used as transverse reinforcement

Fig. 10. FVDT prior to casting

Fig. 11. Concrete placement in stem

Table 1. Material properties of concrete and reinforcement

| Material | Properties |
|---|---|
| Semi-light weight concrete | 28 day compressive strength: 7810 psi<br>401 day compressive strength: 11310 psi<br>441 day compressive strength: 10360 psi<br>Unit weight: 126 pcf<br>*Note: The same concrete was used for all LWC beams. Load tests were conducted between days 401 and 441.* |
| Normal weight concrete | 28 day compressive strength: 7270 psi<br>464 day compressive strength: 9610 psi<br>576 day compressive strength: 10790 psi<br>Unit weight: 145 pcf<br>*Note: The same concrete was used for all NWC beams. Load tests were conducted between days 464 and 576.* |
| #3 reinforcing bars | ASTM 615M-14 Grade 420/60<br>Yield Strength: 77.4 ksi (534 MPa)<br>Tensile strength: 107 ksi (738 MPa)<br>*Note: properties based on rebar supplier documentation* |
| 9/16 in. diameter strands | Type: Low- Relaxation Strands<br>Tensile Strength: 270 ksi |

## TEST SET-UP AND PROCEDURES

Specimens were loaded in four-point bending (Fig. 12). Steel "saddles" provided stability to the single-tee specimens at each support (Fig. 13). Load was applied quasi-statically using a hydraulic jack system. A steel I-beam was used spread load from the jack to the specimen (Fig. 14). Rubber bearing pads were used at all support and load points.

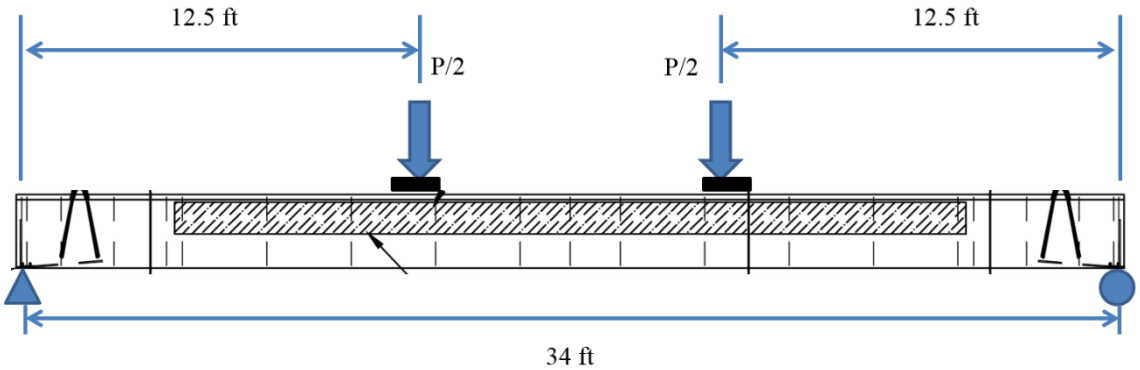


Fig. 12. Four-point bending test set-up. All dimensions are with respect to centerline of supports and load points.

Fig. 13. Specimen braced by "saddle" at each support

Fig. 14. I-beam used for spreading load from jack

The specimens, boundary conditions, and load locations were designed such that the shear forces and flexural-tension stresses in the specimens mimicked those of a typical 60 ft.-long parking garage DT member. At an experimental load of approximately 28 kip (total for both load points), the flexural-tension stress in the specimens was approximately equal to the service-level stress in a parking garage DT. Also at a load of 28 kip, shear force in the specimens was approximately the same as the service-level shear force in a parking garage DT.

Displacement, strain, and force were monitored and logged using a computer data acquisition system. The instrumentation placement is shown in Fig. 15 and Fig. 16. Six strain gauges monitored the concrete strain; two were placed at the edges of the foam voids, two at the bottom of the member below the load points, and two on top of the flange at mid-span. Four string potentiometers measured vertical displacement at mid-span; two were attached to the stem and two were attached to the flange.

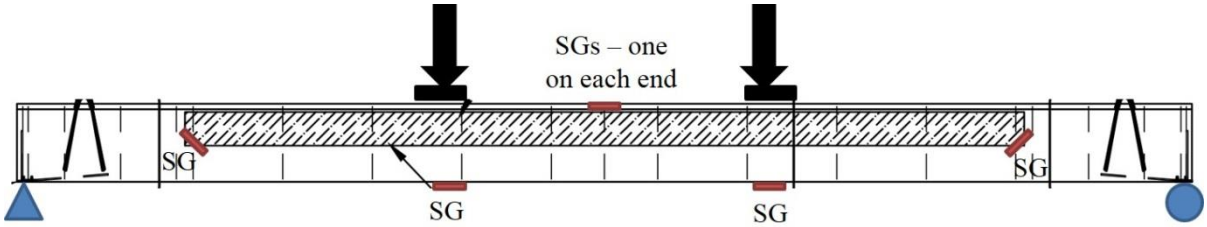


Fig. 15. Strain gauge (SG) locations

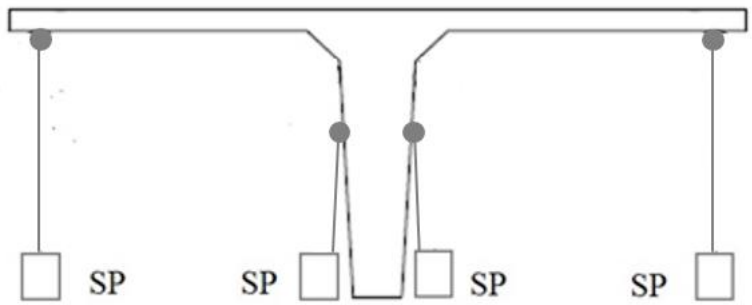


Fig. 16. String pots (SP) locations. All SPs attached at mid-span

Specimens were loaded in seven different stages, in the following order:

1. Load to 50 % of flexural service load
2. 100 cycles between 20% to 50% of flexural service load
3. Load to 100% of service load
4. 100 cycles between 20% to 100% of flexural service load
5. 24-hour sustained load test (specimen L2 only)
6. Load to ultimate flexural capacity
7. Shear load test (used different boundary conditions)

This paper will focus on the results of the load stage 6, quasi-static loading to ultimate flexural capacity. Other than flexural cracking, the specimens did not experience any damage during load stages 1 to 5. A complete discussion of service, cyclic, and shear load stages will be available in the forthcoming thesis.

## RESULTS AND DISCUSSION

Load-displacement behavior during ultimate flexural tests is shown in Fig. 17. Load in the figure is the total applied load from the hydraulic jack; self-weight is not included. Displacement is the mid-span displacement due to applied loads only, and is the average of all string potentiometers. The figure also shows the loads associated with service stress, factored shear, and nominal flexural capacity. Comparisons with flexural capacity will be made in the next section.

Load-displacement behavior was similar for all specimens during the ultimate flexural tests. Response was initially linear-elastic. Stiffness decreased as flexural cracking opened at a load of approximately 15 kip. Note that these cracks had already formed during service load testing, so opening of the cracks at 15 kip corresponded to decompression of the pre-stress.

New cracks formed and existing cracks extended (Fig. 18) as load was increased beyond the previous peak of 28 kip (from the service load tests). As the force approached 50 kip, stiffness was effectively gone and the displacement was imposed without significant increase in load. Testing continued until the jack reached its maximum stroke length. Because of

changes in the spacers and I-beams placed between the jack and specimen, the maximum displacement achieved during testing was different for each specimen.

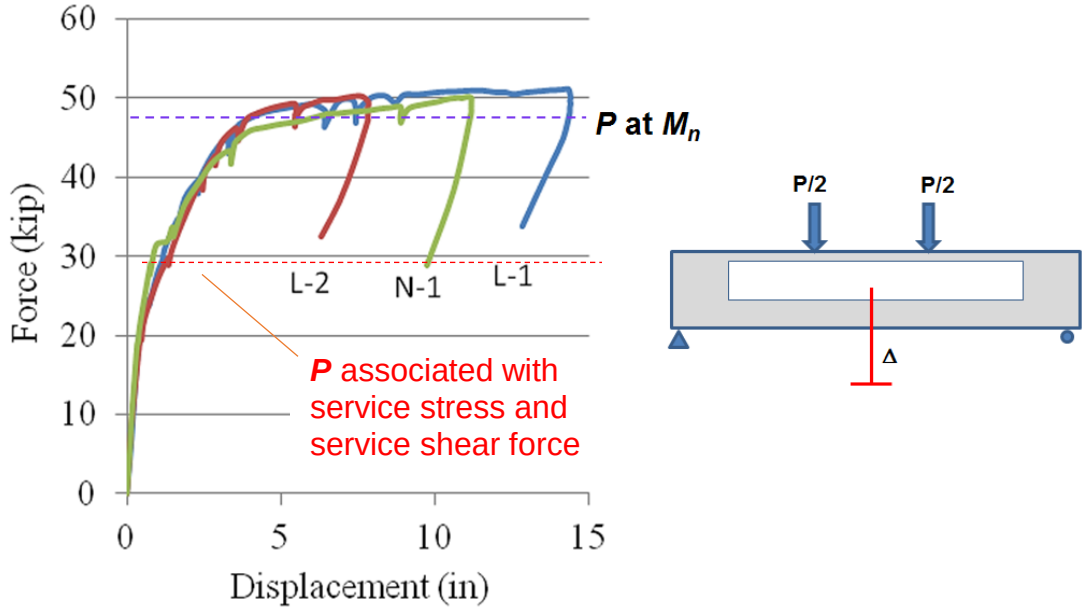


Fig. 17. Load-displacement response during ultimate flexural tests

Fig. 18. Widening of the cracks and formation of new cracks during ultimate flexural test

Crushing of the top flange was not observed in any of the specimens during the ultimate flexural tests. It is likely that the specimens could have supported additional displacement prior to crushing of the flange; however, it is not likely that the peak load would not have increased significantly. Residual displacement of approximately 4 to 9 inches was observed in the specimens after the load was removed.

Each specimen's behavior was ductile at loads near the peak experimental load. However, relative ductility of specimens cannot be compared using the available data. As previously mentioned, testing was terminated when the hydraulic jack reached the maximum stroke; based on differences (height of spreader beam and spacers between the specimen and jack) in test setups, the available stroke length was different for each test. Thus, the apparent differences in ductility are a function of testing limitations and not a function of the specimens.

Strain gages G1 and G4 were placed at angle on the concrete surface near the foam ends (Fig. 19) to monitor for cracking. This location is of interest because of the abrupt change in cross section due to termination of the foam. Load-strain response of these gages was effectively linear-elastic throughout the ultimate flexural tests (Fig. 19), suggesting that cracks did not form at this location. Visual inspection during testing also confirmed that cracks did not form in the concrete adjacent to the ends of the foam. Thus, it is considered unlikely that shear cracks would form at this location in FVDT parking garage members having similar detailing and material properties at the test specimens.

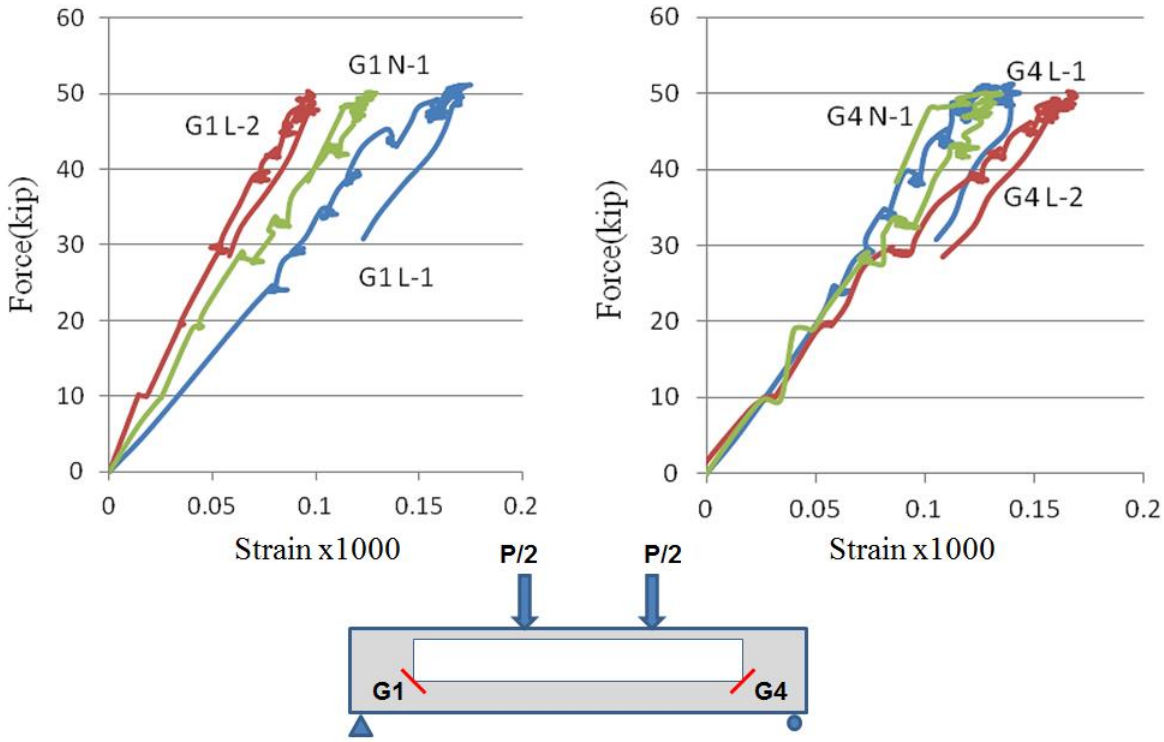


Fig. 19. Load-strain response at edges of the foam during ultimate flexural tests

## COMPARISON WITH NOMINAL FLEXURAL CAPACITY

Flexural capacity was calculated using the strain compatibility approach. Calculations used the constitutive model for strands from the PCI Design Handbook[8]. Average concrete compressive strength was taken to be 9380 psi for NWC and 9880 psi for LWC. The presence of foam did not impact the calculations because the theoretical compression block was within the flange at nominal capacity. In each case, the maximum experimental moment exceeded the calculated nominal flexural capacity (Table 2). On an average the specimens supported experimental moments that were 15% larger than their nominal flexural capacities.

Table 2. Comparison of experimental and nominal moments

| Specimen | Max moment due to self-weight (kip-ft) | Max moment due to applied load (kip-ft) | Total experimental moment, $M_{exp}$ (kip-ft) | Nominal flexural capacity, $M_n$ (kip-ft) | Strength ratio, $M_{exp}/M_n$ |
|---|---|---|---|---|---|
| L1 | 36.1 | 318.8 | 354.9 | 307.1 | 1.16 |
| L2 | 34.6 | 312.5 | 347.1 | 307.1 | 1.13 |
| N1 | 41.6 | 312.5 | 354.1 | 306.9 | 1.15 |
| | | | | Average | 1.15 |

## SUMMARY AND CONCLUSIONS

This paper reports the results of flexural testing on three foam-void precast pre-stressed tee-beams. The tests were part of a larger experimental program focusing on the use of foam voids to reduce self-weight of precast DT members. The motivation for the research was to reduce the self-weight of parking garage DT members such that two members can be shipped in one load.

Three key observations are made regarding the testing: First, the foam-void test specimens demonstrated ductile flexural behavior at ultimate loads. Second, the specimens supported experimental moments that exceeded theoretical nominal capacity. The ratios of experimental-to-nominal moment were, 1.16, 1.13, and 1.15 for specimens L1, N1, and N2, respectively. Third, cracking was not observed at the end of the foam voids at ultimate load levels. Thus, cracking at the foam ends would not be expected in service conditions for similar foam-void members.

The above observations are specific to the specimens and are conditional on the concrete strength, transverse reinforcement, and other structural details. The minimum compressive strength for any specimens at the time of testing was 9610 psi. Transverse reinforcement consisted of double-leg #3 stirrups spaced at 12 in. It is recommended that follow-up studies consider members with lower concrete strengths and less shear reinforcement.

## ACKNOWLEDGEMENTS

Funding for Dr. Srimaruthi Jonnalagadda was provided by the Daniel P. Jenny Fellowship Program. Specimens were donated by Tindall Corporation. Mr. Sreedhara's work was funded by the Clemson University Glenn Department of Engineering and by the Clemson University School of Architecture. Assistance in the lab was provided by Scott Black, Danny Metz, Sam Biemann, Frank Filosa, Anish Uppala, Ahmad Tarawneh, Mathew Thorn, and Ninad Deshpande.

## REFERENCES

1. Nasser, G., Tadros, M., Sevenker A., and Nasser D., "The Legacy and Future of an American Icon: The Precast, Prestressed Concrete Double Tee," *PCI Journal* (2015).
2. Wilden H. "Setting the Record Straight on the Origin of the Prestressed Double Tee" (2014) http://www.enconunited.com/pdf/Double%20Tee%20Origin.pdf Accessed 28 June 2017.
3. Edwards, H., "The Innovators of Prestressed Concrete in Florida." *PCI Journal* (1978).
4. Barney, G., Corley, W., Hanson, J., and Parmelee, R., "Behavior and Design of Prestressed Concrete Beams with Large Web Openings," *PCI Journal* (1977).
5. Savage, J., Tadros, M., Arumugasaamy, P., and Fischer, L "Behavior and Design of Double Tees with Web Openings," *PCI Journal* (1996).
6. Saleh, M., Tadros, M., Einea, A., Fischer, L., and Foster, E "Standardized Design of Double Tees with Large Web Openings." *PCI Journal*, (1999).
7. BubbleDeck Systems. (2008), http://www.bubbledeck.com/ Accessed 28 June 2017.
8. PCI. "PCI Design Handbook 7th Edition" *Precast/Prestressed Concrete Institute* (2010).